SURFACE CEILING DOWNLIGHT - SDOWN

Item code 86.OC02.1311.03



SDOWN

Item code	**86.OC02.1311.03**
Product type	**Outdoor**
Category	**Surface Ceiling Downlight**
Family	**SDOWN**
Pictograms	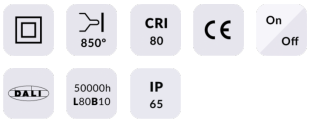

Product	
Real power (W)	**10**
Real luminous flux (Lm)	**800**
Luminous efficiency (Lm/W)	**80**
Beam angle (º)	**20**
Life time (h)	**50000h L80B10**
IP	**IP65**
Control gear	**ON-OFF**
Colour temperature (K)	**3000**
Colour consistency (SDCM)	**SDCM3**
CRI	**80**

Dimensions	
Product dimensions (mm)	**Ø75X100 mm**

Scheme

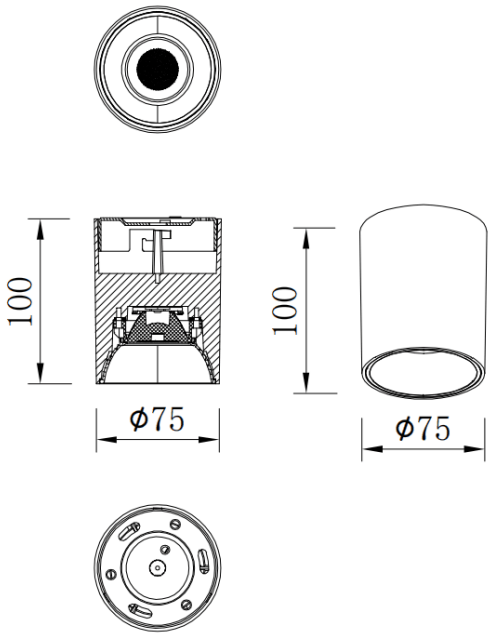

Photometry

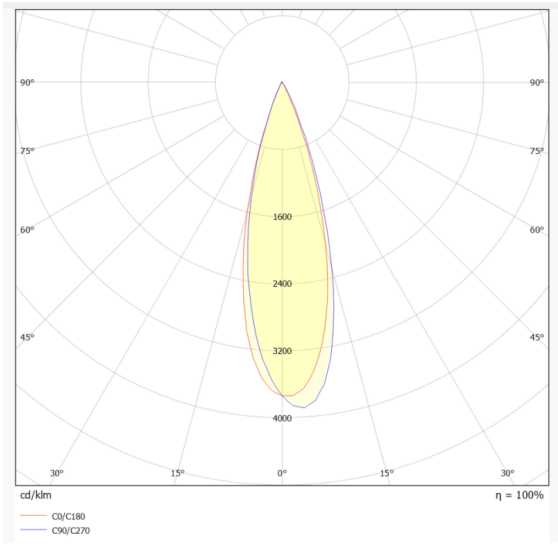
90°
75°
60°
45°
1600
2400
3200
4000
30°
15°
0°
cd/klm
η = 100%
C0/C180
C90/C270

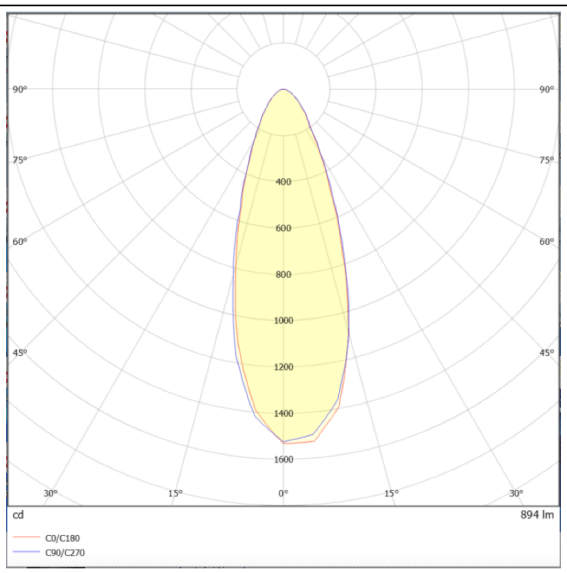
90°
75°
60°
45°
400
600
800
1000
1200
1400
1600
30°
15°
0°
cd
894 lm
C0/C180
C90/C270